WELKER
FLOW MEASUREMENT SYSTEMS®

Welker Flow Measurement Systems, Inc.
13901 West Bellfort
Sugar Land, Texas U.S.A. 77478
Tel. 281.491.2445 • Fax 281.491.2455
E-mail Sales@welkerflow.com

WFMS Inc. can provide a wide variety of HMI/SCADA implementations to visualize and control the various operations of metering and other process systems. These software systems can present a monitor only presentation with report generation to systems which provide control and communication connectivity to a wide variety of interfaces, including DCS and PI systems. Operator, Engineering and Supervisory access levels can be configured to allow or restrict access to the system based on site specific requirements and operational procedures.

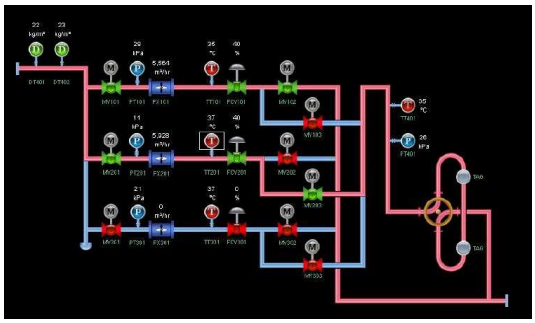

P&ID graphic presentations can be provided from simple line oriented displays to graphics with embedded control functions.

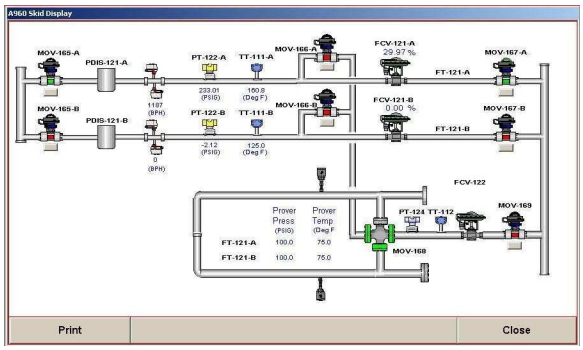

Implementation can be done utilizing third party software packages or with WFMS software to meet the needs of the specific end-user requirements.

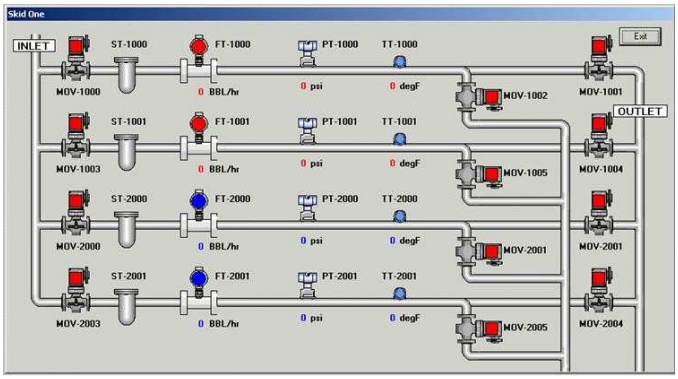

With available technology, communications can be implemented from classical serial RS232 and RS485 to fiber optic network architectures including multiple client connections to system servers. These systems can include redundant flow computers, redundant servers, PLCs, other peripheral devices, links to plant DCS, and multiple client access work stations.

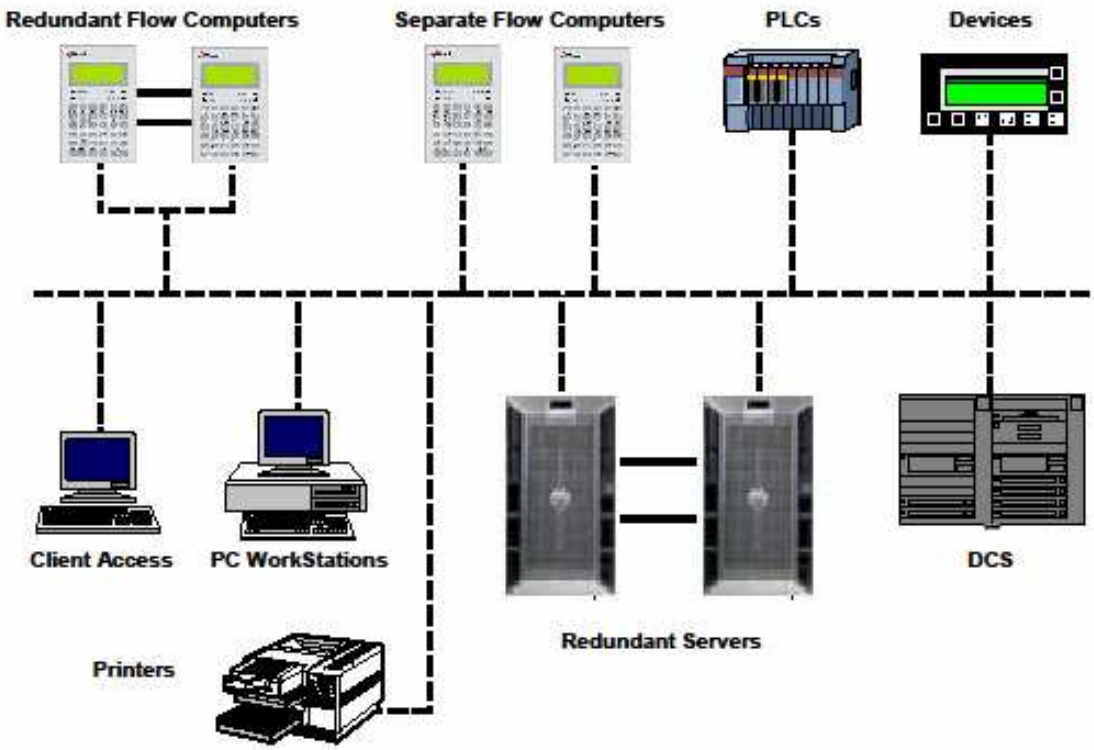

Implementation can be customized to provide an optimal system for current needs which can be expanded for future growth. Welker Flow Measurement Systems has the expertise and field experience to develop systems that will accomplish customer goals for communications, control and reporting of metering information. Reliability, functionality and good customer support are the primary results of the HMI/SCADA system delivered.